The 2008 Asian Roundtable
on Corporate Governance

Jisoo Lee

Senior Analyst/ Center for Good Corporate Governance (CGCG)
Seoul, Korea

Session 5

Related Party Transaction: Approval by Boards and Shareholders in Asia

Case Study: Korea

Hong Kong, China
13-14 May 2008

The views expressed in this paper are those of the author and do not necessarily represent the opinions of the OECD or its Member countries or the World Bank

Hyundai Motor Group

> *Hyundai Motor Group*

- The second largest *chaebol* group in Korea
- Hyundai Motor Co. is the fifth largest auto-maker in the world
- Total Revenue (2006): KRW 74 trillion (approx. US $74 billion)
- Total Net Profits (2006): KRW 3.1 trillion (approx. US $ 3 billion)
- Key Person:

  Mong-koo Chung (Chairman of the Group)

  Eui-sun Chung (President of KIA Motors & the only son)
- Hyundai Motor Group has thirty-six (36) affiliates in the group
- Key Affiliates: Hyundai Motor Co., KIA Motors, Hyundai Mobis, Glovis, Bontech, AMCO and etc.
- Hyundai Motor Group became a separate group from the former Hyundai Group in 2000.

> Hyundai Motor Group

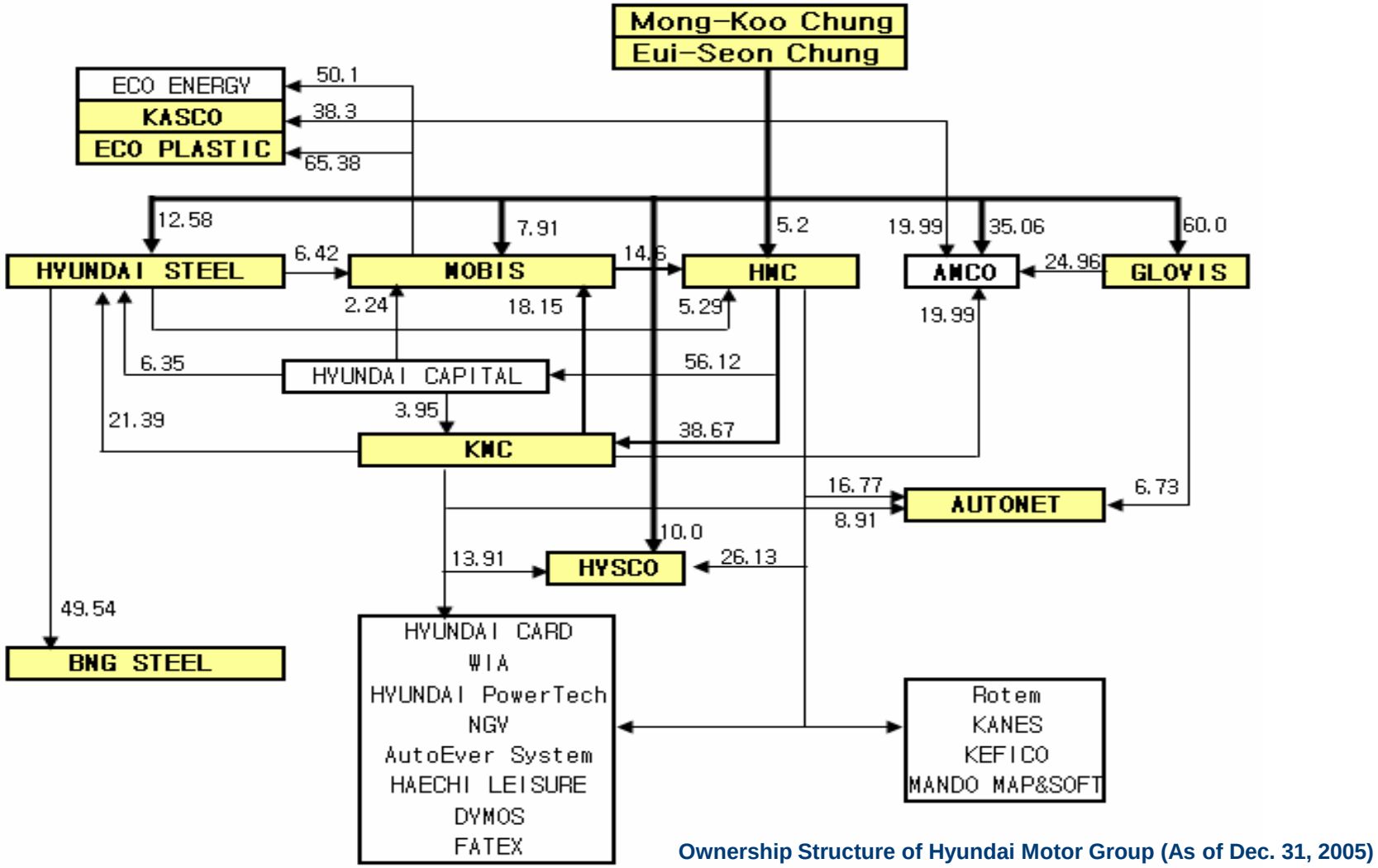

Ownership Structure of Hyundai Motor Group (As of Dec. 31, 2005)

> Glovis Co. Ltd. (1)

- Glovis was established in February of 2001
- Chairman Chung (40%) and his son (60%) had a 100% stake
  - The initial paid-in-capital was merely KRW 5 billion (US$ 5 million)
- Glovis is engaged in Logistics Business –i.e., moving automobiles
- Prior to I.P.O., Chairman Chung and his son were able to realize 6,400% return for their investment within four (4) years since its establishment
  - Cash income of KRW 13 billion through dividend payout
  - Approximately KRW 80.6 billion by selling 25% of Glovis' outstanding shares to a Norwegian company (KRW 10,746 /share)
  - Even after these series of transactions, they still hold a 75%stake in Glovis
- Glovis was listed in KRX in December 2005 after issuing 20% additional stocks

> Glovis Co. Ltd. (2)

- The wealth accumulated by Chairman Chung and his son reaches KRW 1.3 trillion (approx. US $1.3 billion) thru Glovis
  - Based on today's stock price (KRW 60,000/share)
  - Chairman Chung and his son still hold 60% of the outstanding shares of this Company
- Why did Chairman Chung and his son needed to establish Glovis?
  - In 2001, Chairman Chung had merely 5% of HMC's outstanding shares
  - Chairman Chung was aging and needed to lay foundation for Eui-seon Chung to become his only heir
  - In case Chairman Chung transferred his wealth directly to his son, they needed to pay 40% as the inheritance tax
  - The wealth enjoyed by Eui-seon Chung was supposed to be used as the seed money to inherit the entire empire, Hyundai Motor Group
- How could Glovis realize such startling performance?

> Glovis Co. Ltd. (3)

[Glovis' Revenue with the affiliated companies] (Unit: KRW million)

	2001		2002		2003		2004	
	Amount	%	Amount	%	Amount	%	Amount	%*
Counterpart	198,491		374,227		578,769		902,750	
Total Revenue with affiliated companies	185,751	93.58%	344,169	91.97%	501,860	86.71%	727,735	80.61%
Hyundai Motor Company	85,351	43.00%	147,514	39.42%	210,534	36.38%	311,790	34.54%
Hyundai Mobis	41,787	21.05%	75,191	20.09%	89,646	15.49%	108,467	12.02%
KIA Motors	41,027	20.67%	74,220	19.83%	117,157	20.24%	153,095	16.96%
Others	17,586	8.86%	47,244	12.62%	84,523	14.60%	154,383	17.10%

- During the first four years since its establishment, Glovis created business by entering into transactions with its affiliates (exceeded 80% of its total revenue) – Related party transactions
- Other entities such as AMCO, Auto-Eversystem, WISCO, Bontech were similarly used as the vehicles of transferring wealth from father to son without paying much tax

> Glovis Co. Ltd. (4)

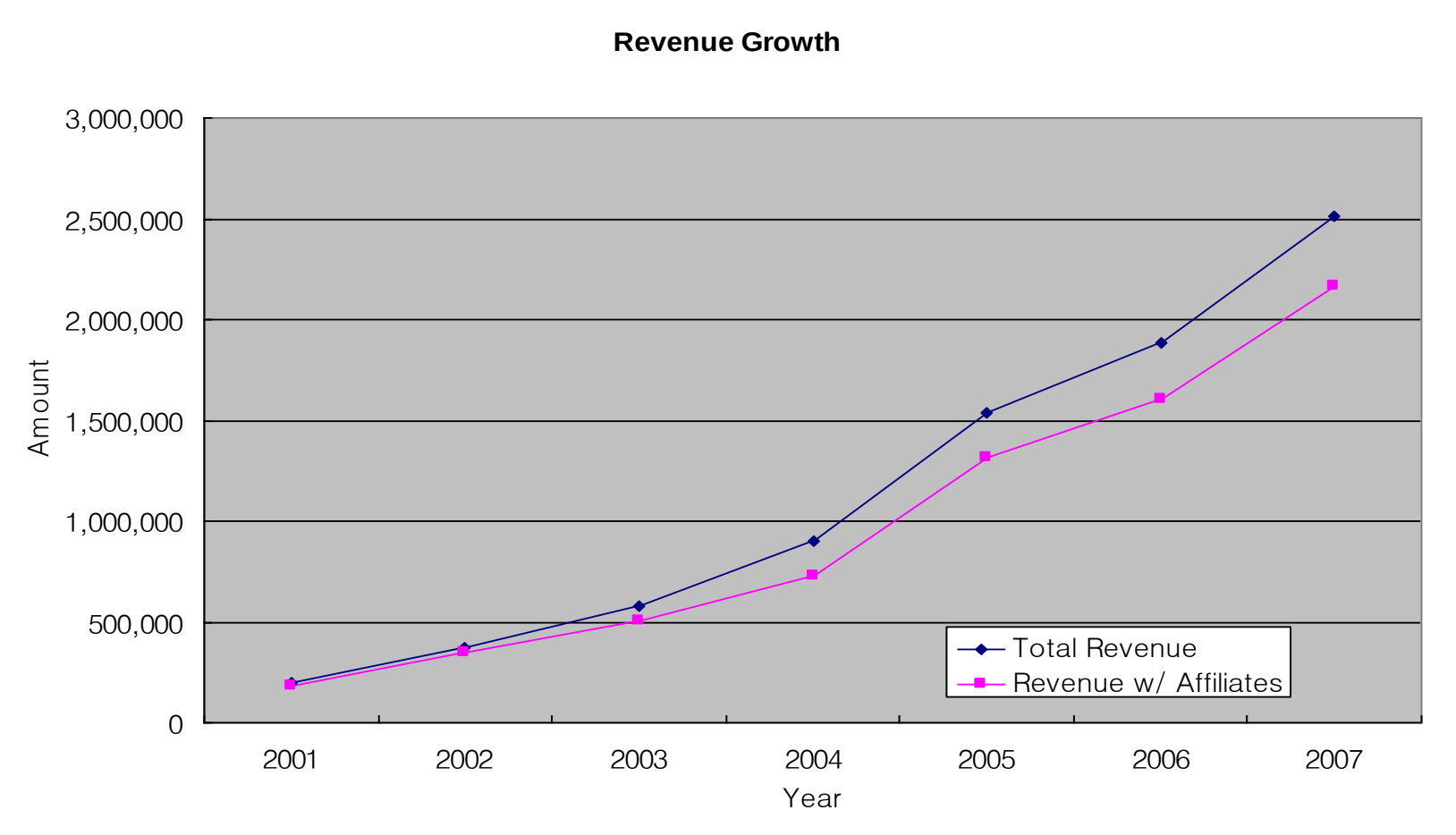

> Board Composition of HMC

- Board composition of Hyundai Motor Company when Glovis was established
  - Four inside directors:
    - Mong-Koo Chung, Dong-Jin Kim, Chung-Koo Lee, Thomas Sidlik
  - Four non-executive directors (outside directors)
    - Dong-Ki Kim, Byung-Il Park, Kwang-Nyun Kim. Miyamoto Masao
  - Thomas Sidlik represented Daimler Chrysler while Miyamoto Masao was a director of Mitsubishi Corp.
- After analyzing the board's minutes, we noticed that these issues were not even discussed as the agenda at the board meeting
  - "Conflict of interests" existed but the management was negligent
- The board did not seek for the shareholders' approval

> Aftermath

- The newspaper started covering the amazing story of Glovis and raised several questions
- The Prosecutors' Office initiated an official investigation
- PSPD, a corporate watchdog, filed a criminal complaint to the Prosecutors' Office on April 8, 2006.
- On April 20, 2006, realizing the public sentiment and prosecutors' built-up pressure, Chairman Chung announces plan to contribute KRW 1 trillion (US$ 1 billion) to a charitable organization
- On April 28, 2006, the Prosecutors' Office arrested and indicted Chairman Chung: misappropriation, embezzlement, and maintaining slush funds
- The trial court found Chairman Chung guilty of all charges; sentenced three-year prison term and imposed hefty fines
- The Appellate Court upheld the lower court's decision but ordered 'postponed execution of the prison terms'
- The Supreme Court remanded the case back to the Appellate Court for retrial and the case is still pending
- The Fair Trade Commission imposed hefty fines – Hyundai Motor Group challenges this decision

> What went wrong?

- Chairman Mong-koo Chung is known for his stubborn and emperor-like management style
- The Board was not functioning well – lack of independence, no check and balance, negligent
  - The Company had implemented most of the CG framework, at least on its surface
  - No guilty conscience regarding the "Related Party Transaction"
- 'Corporate Opportunity Doctrine' does not exist in Korea
  - Not understanding the legal concept of "fiduciary duty"
- Common practices in corporate sector
- The courts have been overly lenient
- General public gives too much credit toward the family-owned cheabol groups – "Corporate Korea" mentality
- Korean cheabols still operate as one giant entity – gap between legal system and the reality

Thank you